PSB M SPAN JUNCTION DETAIL

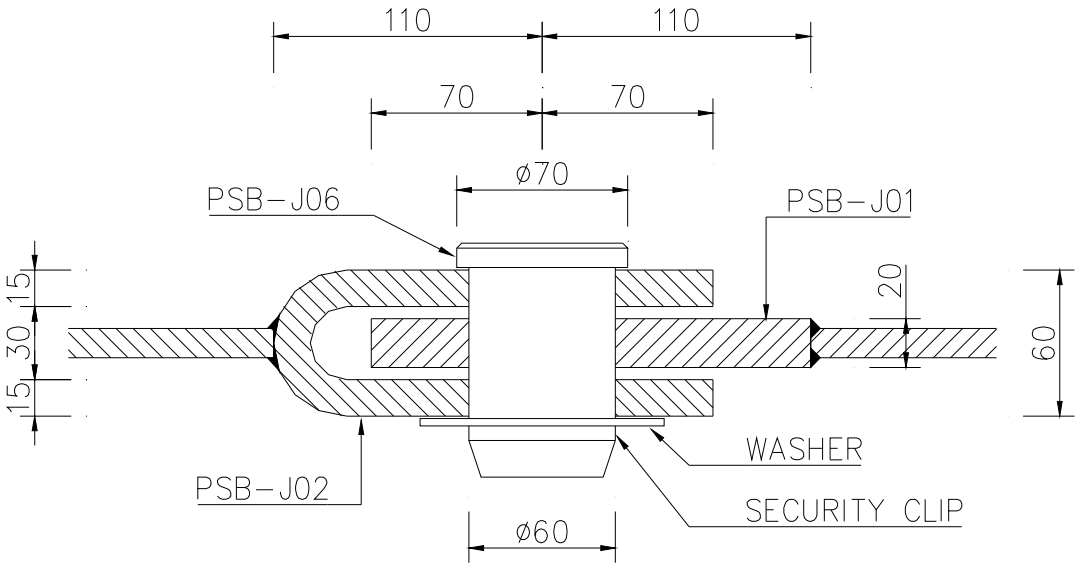
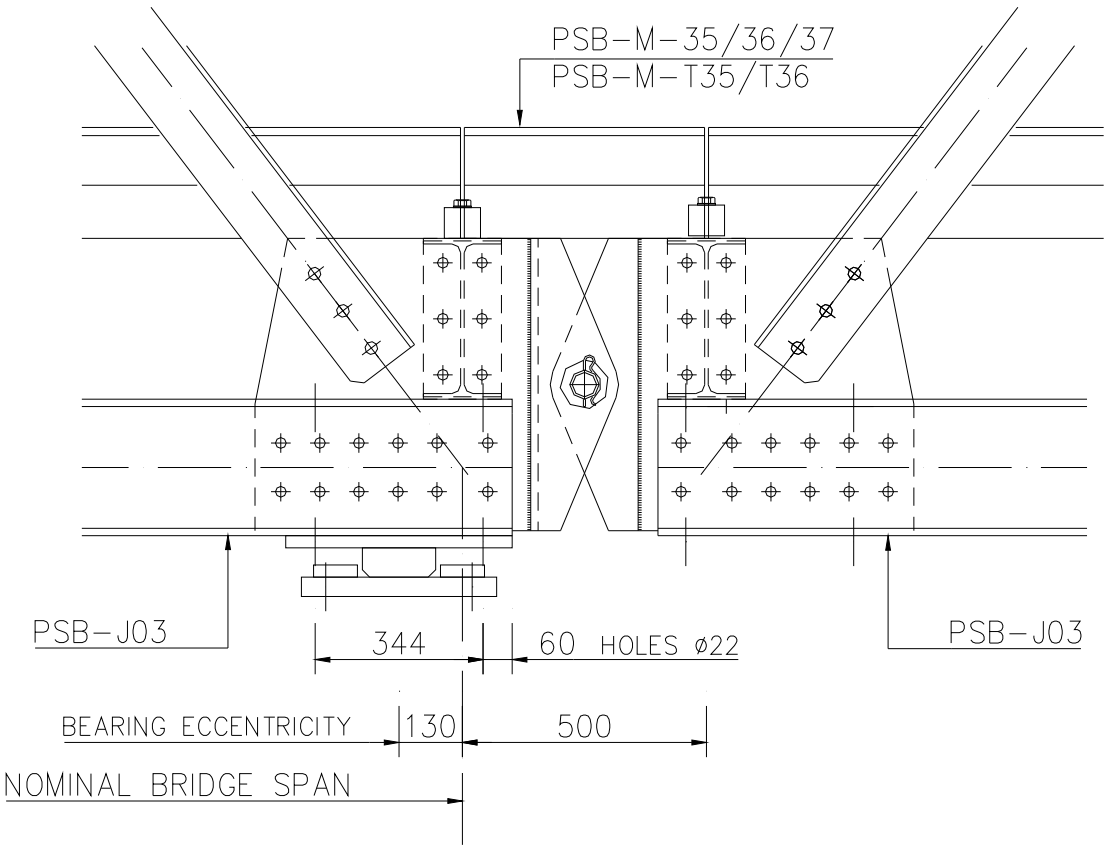
SECTION JUNCTION PIN